PRO

TICA®

INSTALLATION & OPERATION MANUAL

Big Capacity Duct Type Indoor Unit

Applicable to: TMDH-BI series

TICA PRO TICA PRO TICA PRO

Contents

I. Overview 2
II. Safety Precautions 3
III. Unit Description 4
1. Scope of Application, Purposes and Features 5
2. System Principle 5
IV. Technical Specifications of Unit 6
1. Nomenclature 6
2. Technical Specifications 7
3. Structure Diagrams 9
V. Unit Installation 12
1. Key Points for Installation 13
2. Unit Installation 15
VI. Instructions of Unit Debugging before Operation 22
1. Preparations before Startup 23
2. Trial Operation 24
VII. Unit Maintenance 25
1. Routine Operation and Maintenance 26
2. Stop for Maintenance 28
VIII. Analysis and Handling Methods of Common Unit Faults 29
IX. After-sales Service 31
X. Names and Content of Hazardous Substances in Products 33

TICA PRO TICA PRO TICA PRO

I. Overview

This manual is the customer's property and should be used together with the unit. After work, put the manual back in the technical documentation bag and keep it properly.

Please read through this manual carefully before installing the air conditioning unit, and install and maintain the unit according to the manual, ensuring normal and reliable operation of the manual. Only the professional appointed by TICA can undertake the installation work of the air conditioning unit. The vendor shall not bear any responsibility if any unqualified operator installs or maintains the unit or the unit is not installed or operated according to requirements of this manual.

This manual does not cover the differences between various units or all the problems that may be met during installation, so it is impossible for it to provide instructions to all the situations that may occur during installation. If the buyer wants to get further information or meets a special problem but a detailed explanation is not provided in this manual, please contact TICA.

The prompts of "**Danger**", "**Warning**", and "**Caution**" are provided at proper parts in this manual. To ensure personal safety and normal operation of the unit, read through the content carefully and observe the related requirements.

⚠ **Danger:** The prompt points out the potential hazard situation. Ignoring it may lead to death or serious personal injury.

⚠ **Warning:** The prompt points out the potential hazard situation. Ignoring it may lead to minor or moderate personal injury. This prompt is also used for warning of unsafe activities.

⚠ **Caution:** The prompt points out the potential situation of equipment damage. Ignoring it may lead to equipment damage or property loss or possible environmental pollution. It also provides useful help information, which may be good to unit operation or extension of the unit service life. However, it does not indicate that the help information is optimal or is directly related to the improvement of unit operation.

⚠ Warning

Prior to installation or maintenance, lock the unit power supply and disconnecting switch in the power-off state, avoiding personal casualties caused by electric shock or contact with a moving part. All the installation procedures of the air conditioning unit must comply with the national, provincial, and local regulations.

TICA PRO TICA PRO TICA PRO

⚠Warning Related to Refrigerant

Do not use unqualified refrigerant, refrigerant substitute or refrigerant additive. Incorrect using method or using unqualified refrigerant, refrigerant substitute or refrigerant additive will lead to unit damages and various safety hazards. Please select qualified refrigerant or call the 400 hotline to purchase qualified refrigerant. All the technicians operating refrigerant must have acquired qualification certificates, and know very well and strictly observe the technical requirements, laws and regulations related to refrigerant use, handling, recovery, and recycling.

TICA PRO TICA PRO TICA PRO

II. Safety Precautions

- **Before operating the unit, read all the items of "Safety Precautions" carefully.**
- **The part of "Safety Precautions" lists all the important issues related to safety. To avoid electric shock or fire and other possible injuries, be sure to bear in mind and strictly abide by the following rules:**

- Install a leakage circuit breaker.
- The user cannot try to install the unit independently. Improper installation may lead to water leakage, electric shock, or fire.
- Be sure to install the grounding wire, which cannot be connected to the gas pipe, tap water pipe, lightning arrester, etc. Improper installation of the grounding wire easily leads to an electric shock accident.
- Be sure to make a foundation platform before installing the unit to ensure stable operation o the unit.
- Use the accessories specified by TICA and ask the manufacturer or authorized distributor to provide installation and technical services.
- The main controller must adopt the same power supply system together with the unit.
- The control data line must be separated from the power cord of power supply to prevent interference.
- Do not insert your fingers or other objects into the air outlet or inlet, lest you would be injured or the air conditioner would be damaged. The fan running at a high speed is very dangerous. Prevent kids from getting close to the fan.
- Do not damage the power cord or turn on/off the air conditioner by inserting/pulling out the power plug.
- Do not use water to flush the air conditioner directly; otherwise electric shock or other accidents are easily caused.
- Ensure smooth air inlet and outlet of the air conditioner.
- Do not turn on/off the air conditioner frequently; otherwise the air conditioner may be damaged due to frequent startup.
- Cut off power supply if the unit will not run for a long time or in winter.
- If the unit will be used again after stop for a long term, first connect the power supply for the unit for preheating for 12 h.
- The user cannot try to repair the unit independently. Improper repair may lead to an operation failure or burnout of the unit. To have the unit repaired, the user need needs to contact the local branch or authorized maintenance service provider.

⚠Caution

- **When charging or supplementing refrigerant for the unit, make sure that the charging amount and refrigerant type are consistent with the unit nameplate. A refrigerant charging mistake may lead to a unit fault or other potential safety hazards.**
- **Acid, alkali, salt spray and other corrosive gases will damage the unit casing, pipeline or electrical components. The unit installation position must be far away from the site with corrosive gases.**

III.Unit Description

TICA PRO TICA PRO

1. Scope of Application, Purposes and Features

Scope of application and purposes

TICA TMDH series high static pressure ducted type IDU have diversified models, with cooling capacity ranging from 20kW to 61.5kW. TMDH series air conditioners are widely used in commercial office buildings, high-end residences, canteens, hospitals, banks, and shopping malls. They feature mature technology, flexible design, easy installation, and easy control.

Features

- **Diversified models, widely application:** high static pressure ducted type IDU have eight models available for customers to choose from, addressing air conditioning needs for domestic and commercial use.
- **Easily laid out:** The air conditioner is connected to an upper air duct and installed on the ceiling, without occupying the space of the wall or floor. The installation does not affect indoor decoration. Instead, it perfectly matches indoor decorate and highlights overall elegance of the space.
- **Auto energy adjustment:** The big capacity duct IDU controlled by VRF has intelligent automatic energy adjustment, greatly reducing actual operating cost of the unit and avoiding the impact on the entire power grid upon unit startup.
- **Good air supply status:** The unit is connected to each corner in a room via ducts so that cold/warm air can evenly distributed in the entire space.
- **Easy and flexible installation:** Because the IDU is not high, it is easy to choose an installation place where the air duct is shortest. A return air pipe can be connected to the rear of the unit.
- **Flexibly relocated:** Sometimes, air supply location should be changed due to the change in the structure of the application place of the air conditioner. The big capacity duct IDU is incorporated with a flexible air duct. Therefore, to change air supply location, just change the air duct.
- **Controller:** It is intelligently controlled via microcomputer, which is user-friendly and easy to use. It is a fine colorful LCD controller, providing personalized status display, practical and fashionable. It features a perfect protection system, provides intelligent self-diagnosis function, and automatically displays error codes in details. It secures stable running of the unit.

2. System Principle

The system diagram for the operation system of this unit is provided below:

TICA PRO TICA PRO TICA PRO

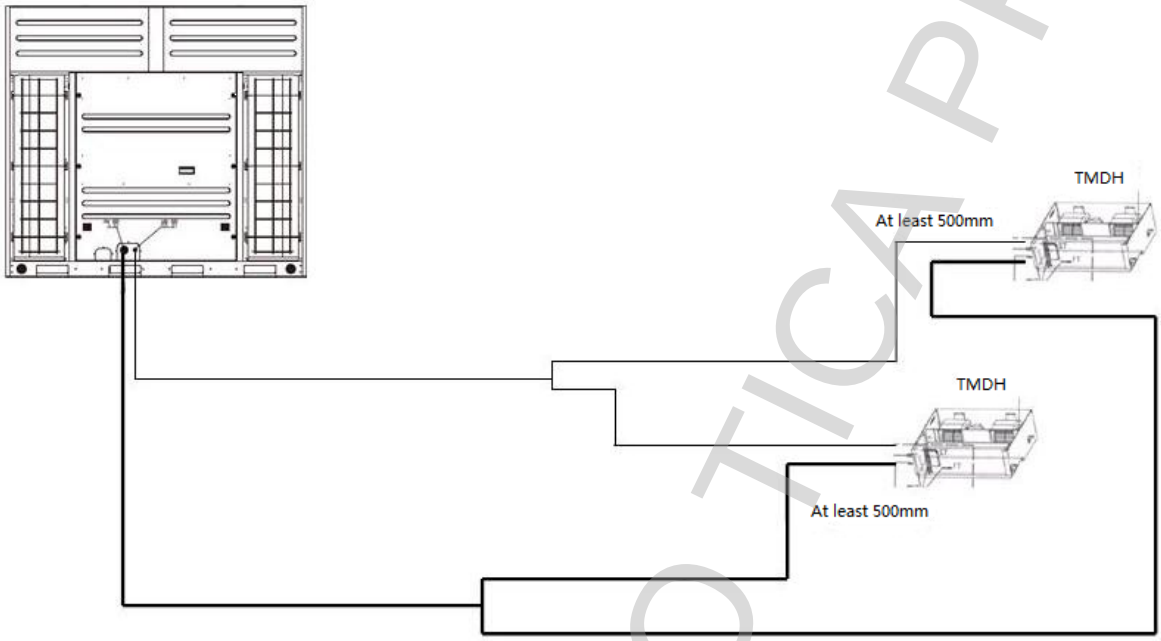

IV. Technical Specifications of Unit

1. Nomenclature

Big capacity duct IDU：

TICA PRO TICA PRO TICA PRO

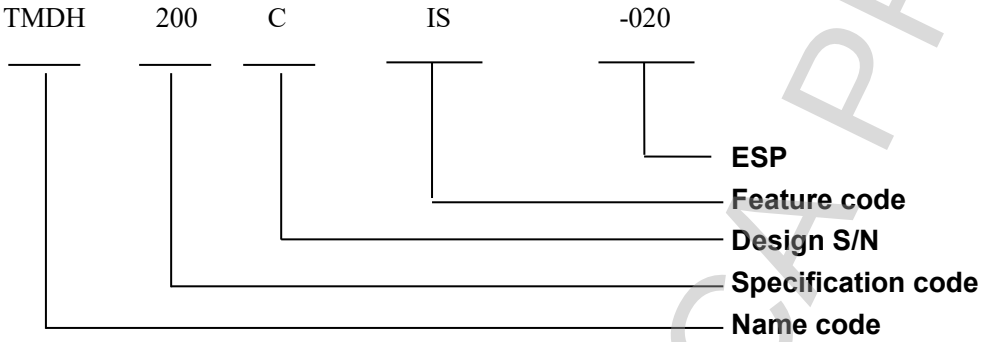

Name code	Specification code	Design S/N	Feature code	ESP code
TMDH—Big capacity duct IDU	20kW	C—Version	I—Foamed board S-Jet type	200Pa

2. Technical Specifications

Specifications of big capacity duct IDU:

Model			TMDH		200BI	250BI	335BI	400BI	450BI	500BI	560BI	615BI
Rated cooling capacity				kW	20.00	25.00	33.50	40.00	45.00	50.00	56.00	61.5
Rated heating capacity				kW	22.40	27.00	37.50	45.00	50.00	56.00	63.00	69
IDU	External dimensions		Length	mm	1410	1410	1860	1860	1860	1860	2360	2360
			Width	mm	906	906	1006	1006	1006	1006	1006	1006
			Height	mm	590	590	800	800	800	800	840	840
	Weight			kg	100	100	200	200	200	200	260	260
	Rated air flow			m^3/h	4000	4000	7000	7000	9000	9000	10000	10000
	ESP			Pa	200	200	250	250	250	250	300	300
	Power supply				380V 3N – 50Hz							
	Condensing water drainage pipe				DN25(R1)							
	Return air inlet dimensions			mm	1140*480	1140*480	1590*690	1590*690	1590*690	1590*690	2090*730	2090*730
	Air outlet dimensions			mm	820*150	820*150	930*291	930*291	930*291	930*291	1116*343	1116*343
Connection pipe	Connection mode				Weld them.							
	Dimension	Liquid pipe		φmm	12.7	12.7	15.88	15.88	15.88	15.88	19.05	19.05
	Dimension	Gas pipe		φmm	22.23	22.23	28.6	28.6	28.6	28.6	31.8	31.8

Model	TMDH		200CI	250CI	280CI	335CI	400CI	450CI	500CI	560CI	615CI
Rated cooling capacity		kW	20	25	28.5	33.5	40	45	50	56	61.5

TICA PRO TICA PRO

Rated heating capacity			kW	22.4	27	31.5	37.5	45	50	56	63	69
IDU	External dimensions	Length	mm	1410			1860				2360	
		Width	mm	906			1006				1006	
		Height	mm	590			800				840	
	Rated air flow		kg	100			200				260	
	Fan	Air flow	m^3/h	4000			7000		9000		10000	
		ESP	Pa	100/200			100/180/250				200/300	
		Power supply		380V 3N~50Hz								
	Condensing water drainage pipe			DN25（R1）								
	Return air inlet dimensions		mm	1140*480			1590*690				2090*730	
	Air outlet dimensions		mm	820*150			930*291				1116*343	
Connection pipe	Connection mode			Weld them.								
	Dimension	Liquid pipe	φmm	12.7			15.88				19.05	
		Gas pipe	φmm	22.23			28.6				31.8	

Model	TMDH			TMDH200 CIS	TMDH250 CIS	TMDH280 CIS	TMDH335 CIS	TMDH400 CIS	TMDH450 CIS	TMDH500 CIS	TMDH560 CIS	TMDH615 CIS
Rated cooling capacity			kW	20	25	28	33.5	40	45	50	56	61.5
Rated heating capacity			kW	22.4	27	31	37.5	45	48	53	63	65
IDU	External dimensions	Length	mm	1567			2007				2297	
		Width	mm	1376			1376				1510	
		Height	mm	610			610				787	
	Rated air flow		kg	140			200				260	
	Fan	Air flow	m^3/h	4000		5000	7000		8000		9500	
		ESP	Pa	0								
		Power supply		380V 3N~50Hz								
	Condensing water drainage pipe			DN25（R1）								
	Return air inlet dimensions		mm	1177*455			1617*455				1887*623	
	Air outlet dimensions		φmm	400							500	
Connection pipe	Connection mode			Weld them.								
	Dimension	Liquid pipe	φmm	12.7			15.88					
		Gas pipe	φmm	22.23			28.6					

Remarks:

1. The rated cooling capacity is tested under the nominal air flow, when the indoor dry/wet bulb temperature is 27/19°C and the outdoor dry/wet bulb temperature is 35/24°C.

TICA PRO TICA PRO

2. The rated heating capacity is tested under the nominal air flow, when the indoor dry/wet bulb temperature is 20/15°C and the outdoor dry/wet bulb temperature is 7/6°C.
3. The nominal air flow refers to the operating air flow in ventilation state at high-speed step under the standard condition.
4. Piping condition of the standard unit performance test: piping length 7.5 m (horizontal).
5. R410A has been injected to the ODU. For the charge amount, refer to the nameplate. The IDU uses nitrogen for holding pressure.
6. The specification parameters may be changed due to product improvement without prior notice. The parameters indicated on the unit nameplate should prevail.

3. Structure Diagrams

TMDH200/250/335/400/450/500/560/615BI outline drawing

TICA PRO TICA PRO TICA PRO

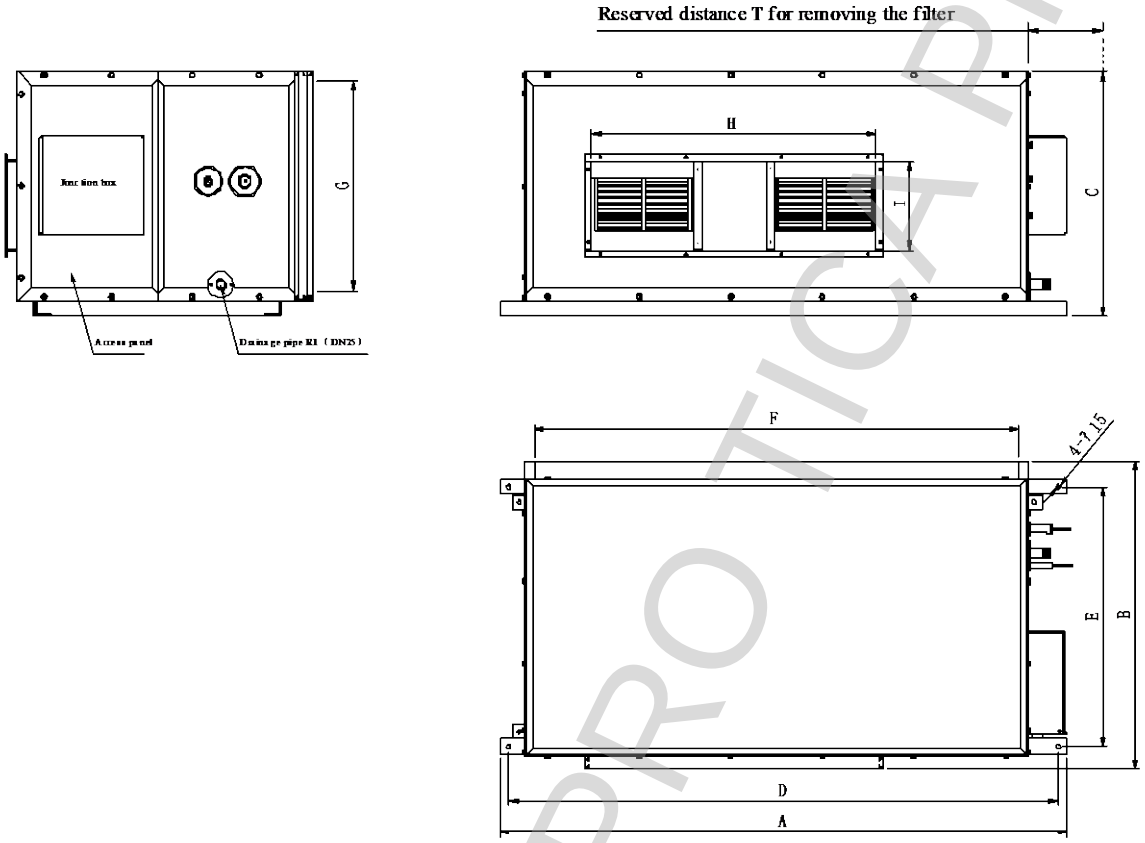

Model	A	B	C	D	E	F	G	H	I
TMDH200BI	1410	906	590	1350	750	1140	480	820	150
TMDH250BI	1410	906	590	1350	750	1140	480	820	150
TMDH335BI	1860	1006	800	1800	850	1590	690	930	291
TMDH400BI	1860	1006	800	1800	850	1590	690	930	291
TMDH450BI	1860	1006	800	1800	850	1590	690	930	291
TMDH500BI	1860	1006	800	1800	850	1590	690	930	291
TMDH560BI	2360	1006	840	2300	850	2090	730	1116	343
TMDH615BI	2360	1006	840	2300	850	2090	730	1116	343

Note: Values in the preceding table are in mm.

TMDH200/250/280/335/400/450/500/560/615CI outline drawing

TICA PRO TICA PRO

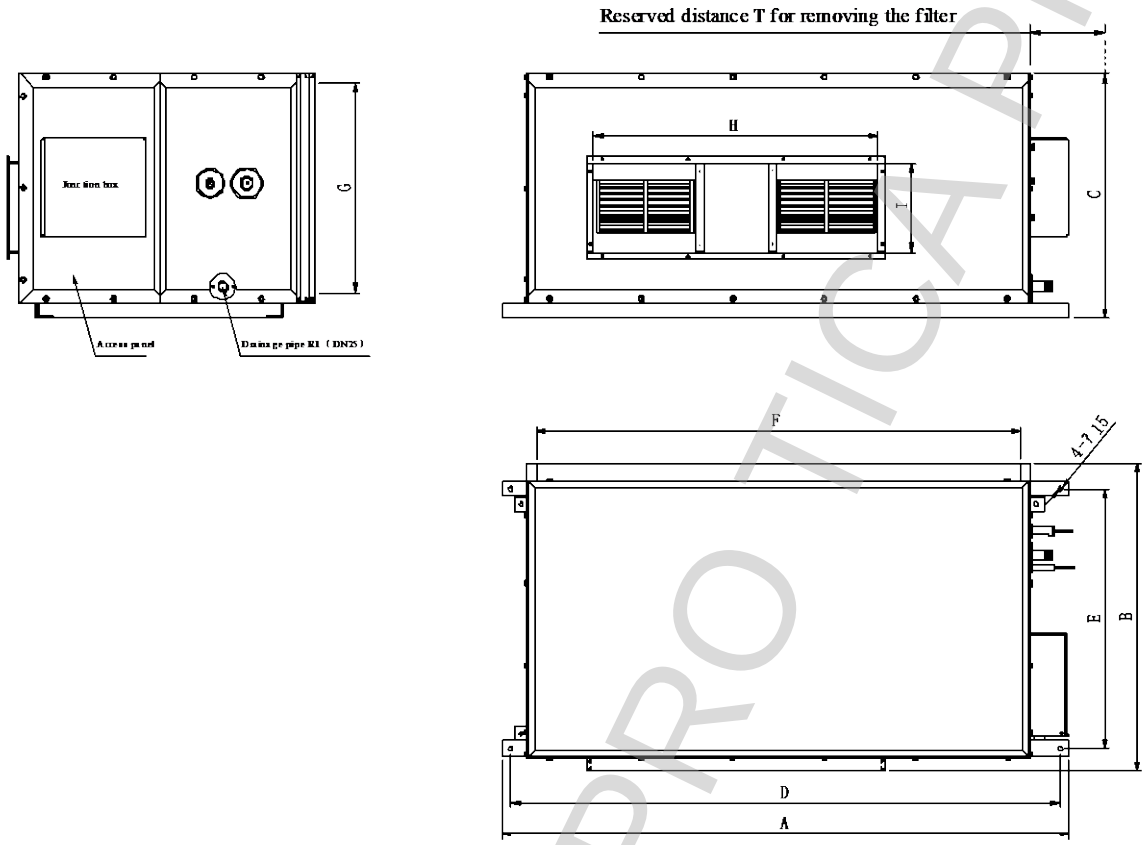

Model	A	B	C	D	E	F	G	H	I
TMDH200CI	1410	906	590	1350	750	1140	480	820	150
TMDH250CI	1410	906	590	1350	750	1140	480	820	150
TMDH280CI	1410	906	590	1350	750	1140	480	820	150
TMDH335CI	1860	1006	800	1800	850	1590	690	930	291
TMDH400CI	1860	1006	800	1800	850	1590	690	930	291
TMDH450CI	1860	1006	800	1800	850	1590	690	930	291
TMDH500CI	1860	1006	800	1800	850	1590	690	930	291
TMDH560CI	2360	1006	840	2300	850	2090	730	1116	343
TMDH615CI	2360	1006	840	2300	850	2090	730	1116	343

Note: Values in the preceding table are in mm.

TMDH200/250/280/335/400/450/500/560/615CIS outline drawing

TICA PRO TICA PRO

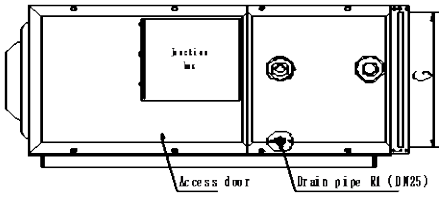

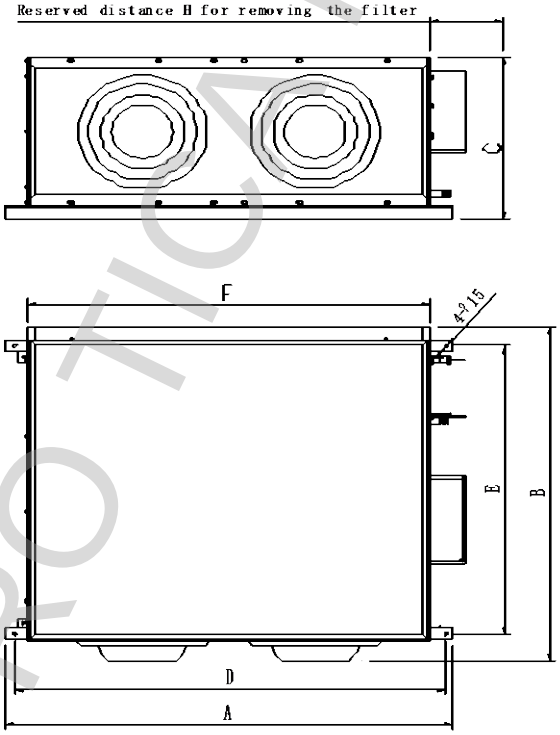

Mode	A	B	C	D	E	F	G	Diameter of air outlet	Qty. of air outlet
TMDH200CIS	1567	1376	610	1527	1220	1177	455	φ400	2
TMDH250CIS									
TMDH280CIS									
TMDH335CIS	2007	1376	610	1967	1220	1617	455	φ400	3
TMDH400CIS									
TMDH450CIS									
TMDH500CIS									
TMDH560CIS	2297	1510	787	2257	1300	1887	623	φ500	2
TMDH615CIS									

V. Unit Installation

TICA PRO TICA PRO TICA PRO

1. Key Points for Installation

Acceptance

Carefully check whether the unit is damaged during transportation. If yes, submit a report and lodge a claim against the shipping company. Check the information on the unit nameplate against the order information to ensure that the received goods are correct. The adopted power supply must be consistent with the electrical requirements on the unit nameplate. The damaged part can be replaced with a manufacturer recognized part only.

Inspection checklist

To recover the loss caused by transport damage, please complete the following counting steps when receiving the unit:

1) Check all the transported items before signing for the unit. Check the unit or packing material for obvious damage.
2) Before storing the unit after arrival, check the unit for hidden damages as soon as possible. For any hidden damages, a report must be submitted within 15 days. If finding hidden damages, stop unpacking. The damaged materials shall be kept at the scene of receiving the goods. If possible, take photos of damaged parts. The owner must provide reasonable evidence to prove that the damage is caused before arrival.
3) Inform the final carrier of the damage situation immediately by telephone or by email. Both the carrier and the consignee should inspect the damage situation promptly.
4) Notify the sales representative and arrange repair. The unit can be repaired only after the carrier representative inspects the transport damage situation.

If no damage is found, check whether the unit accessories are complete against the packing list.

Initial leakage detection

Each loop of all the arriving ODUs is charged with nitrogen (or refrigerant) for protection. Remove the access door of the compressor (for the location of the access door, see the service panel identification on the outline drawing). Locate the charge valve of the high pressure pipe or low pressure pipe of each loop. Install a pressure gauge to test whether each loop is under pressure. If not, it indicates that the charged nitrogen has discharged. Repair the leak as required so that the loop does not leak.

All the IDUs are charged with nitrogen for protection. During installation, check whether the loops are still under pressure. If not, repair the leak as required so that the loop does not leak.

Handling

※ Ensure that the unit is vertical during transportation and handling.

※ Multiple protection packages are used for the unit before delivery. Please use forklift or

TICA PRO TICA PRO

crane and sling during handling.

※ If you find that the unit has any damage or other problems in this process, please notify the distributor or TICA immediately.

Installation position

Preparation before installation

1) Ask the professional technician who has obtained a qualification certificate for air conditioner installation to install the unit. Users are not allowed to install, repair or relocate the air conditioner independently.
2) Ask the professional electrician who has obtained a qualification certificate to connect electric wires, check whether line capacity is enough, and whether power cords are damaged, etc.
3) Install the air conditioning unit following this document. Improper installation may result in water leakage, electric shock or fire.

Installation necessities

1) Tools (not accompanied with the unit)

a. Level instrument
b. Saw
c. Electric mallet
d. Hammer
e. Drill
f. Torque wrench
g. Monkey wrench
h. Standard screwdriver
i. Crosshead screwdriver
j. Knife or wire stripper
k. Tape measure

2) Connection pipe, connecting lead, and thermal insulation materials

a. Purchase the connecting copper pipes according to technical data or purchase them from TICA.
b. Thermal insulation materials shall have proper thickness. Otherwise, condensation may drop.
c. Prior to purchasing electric wires, check the local electric specifications and provisions as well as special wiring requirements or limit.

3) Other required materials

a. Pipe bracket or pipe clamp for fixing the connection pipe.
b. Insulating wire clamp or wire card for connecting wires. Refer to the local specifications.
c. Screws and bolts for installing the unit on the ceiling, if the unit will be installed on the ceiling. Use the screws and locking pads that comply with grade 4 fixture standard or the most proximate metric standard. The length is subject to the actual situations.
d. Refrigerant engine oil and insulating tape.
e. Oil putty or the similar filler.
f. Expansion bolts, for installing the unit on the roof.

TICA PRO TICA PRO

Precautions during installation

1) Places unsuitable for installation:
   a. The place where flammable gases or volatile combustibles (e.g., gasoline and combustible dust) may leak and lead to a fire;
   b. The place where acid or alkaline substance or corrosive gas (e.g., sulfur dioxide and hydrogen sulfide) may be produced, easily corroding the unit and leading to refrigerant leakage;
   c. The place where dust, steam, lampblack or special spraying agent is diffused, e.g., a kitchen.
2) Set a dedicated circuit that complies with the "Electrical equipment engineering standards" and "Indoor electrical wiring specifications".
3) The unit must be properly grounded. The grounding wire must be reliably connected to the earth. Do not connect the grounding wire to the water pipe, gas pipe, and telephone line.
4) Use the power cords with enough current capacity and rated power. Do not make the power cords too tight.
5) Securely fix the power cords so that external force is not imposed on the terminal board. If the power cords are not securely connected or fixed, heat is generated, which will cause electric shock or fire.
6) Electric parts of the unit shall be moisture-proof and far away from the water source. Do not install the wired controller at the places where the flammable gas, sulfide gas, or engine oil is accessible.
7) Install the drainage pipe according to this manual. Ensure that water will drain smoothly. Take thermal insulation measures well. Prevent generation of condensing water.
8) When the unit is installed in a small room, take necessary measures to prevent refrigerant concentration from exceeding the limit in case refrigerant leaks.

During installation, if refrigerant leaks, ventilate the room because toxic gas may be generated when refrigerant encounters fire.

After installation, make an air tightness test to check for leak.

⚠ Caution:

Acid, alkali, salt spray and other corrosive gases will damage the unit casing, pipeline or electrical components. The ODU and IDU installation positions must be far away from the site with corrosive gases.

2. Unit Installation

(1) IDU installation

TICA PRO TICA PRO TICA PRO

The builder, contractor, or user determines the installation place. Take the following factors into consideration to guarantee proper installation:

a. All the power supplies must comply with the electrical parameters on the unit nameplate.

b. The unit shall be installed at a place where air can be discharged to the entire room and the connection pipes, connecting wires, and drainage pipes are easily laid out to the outdoors. Reserve proper space to facilitate installation and maintenance.

c. When installing IDUs, shun a beam.

d. When installing two or more units, ensure that air is smoothly supplied and returned. Directly connecting units in series is prohibited.

e. For the ceiling unit, ensure that the ceiling is strong enough to bear the unit weight.

f. The air ducts must be properly protected against heat, if any, to reserve cold or heat.

g. The shorter the connection pipe and drainage pipe between the unit and ODU, the better. The connection pipes between ODU and IDU must be protected against heat dissipation

To keep quiet, install the IDU at the place away from activity region and use air ducts to transfer cold and warm air, especially for the unit with greater external static pressure.

TMDH unit installation

a. Ensure that sufficient space for maintenance is reserved around the unit, as shown in the following figure (A×B in the figure = length×width of the unit)；

b. 确定好安装位置，将机组固定牢固；

c. 保证室内机有向排水方向的倾斜度，然后将机组固定。

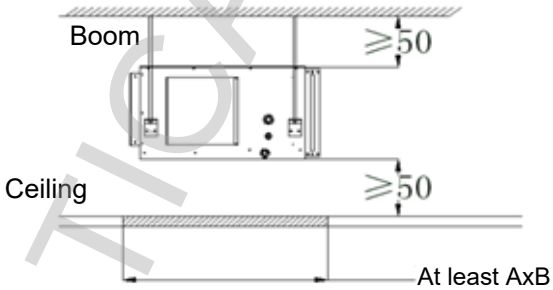

Space for repairing and maintaining high static pressure ducted unit

Lifting the ceiling unit

a. Determine the place where the unit is located. Install the boom and ensure that the boom is securely fixed.

b. Check whether the lifting lug is reliable.

c. Lift the unit:

(1) Mount the lifting lugs of the unit between screw caps 1 and 2 on the lifting screw;

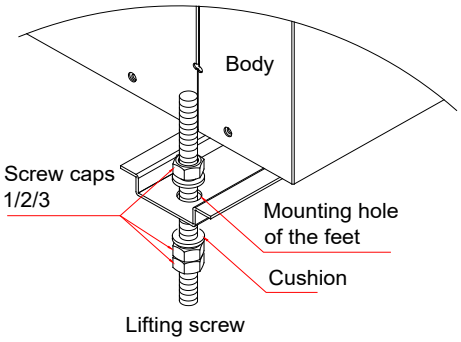

TICA PRO TICA PRO

(2) Use screw cap 2 to adjust height of the device;

(3) Guarantee that the machine is installed horizontally;

(4) Tighten screw caps 1 and 3 to prevent the unit from falling off and vibrating.

Installation of the condensing water drainage pipe

Drainage pipe installation

a. The drainage pipe shall be laid out along the wall to a horizontal plane to prevent the wall from getting dirty by condensing water.

b. Because the bended pipe for liquid seal is not available in general, do not put the end of the drainage pipe into water.

Note: When the IDU is installed in vertical or horizontal mode, water seal shall be set near the water outlet pipe. In this case, recommend using a base or a platform to raise the unit and thus water trap is formed. For the water trap components, see the following figure.

c. To facilitate water drainage, the drainage pipe shall be tilted downwards to avoid water leakage and the degree of declination shall be at least 1:50.

d. Indoors, the drainage pipe shall be wrapped with polyethylene foam for thermal insulation and to prevent condensing water from damaging the ceiling or furniture.

e. After the connection pipe, connecting wire, and drainage pipe are installed, use tape to bind the copper pipe, electric wire, and drainage pipe every 100 mm to 200 mm (4" to 8"), if binding is allowed. Ensure that the drainage pipe is laid out at the bottom of the bundle.

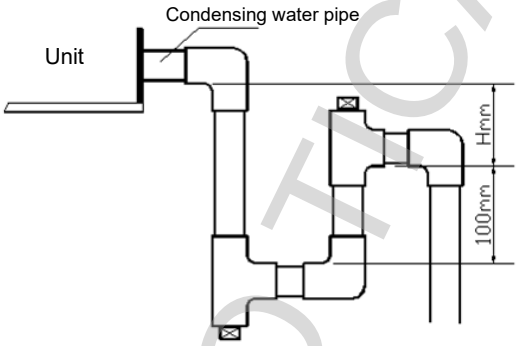

Where, H = Internal negative pressure (unit: mmH_2O) + 20

Note: To ensure that condensing water can be drained smoothly, connect the drainage pipe with water seal.

Drainage test

a. After the drainage pipe is installed, check whether water is drained smoothly. Prepare 2 liter water. Inject water to the water tray of the IDU.

b. Check for water drainage at the end of the drainage pipe. Ensure that condensing water can be smoothly drained and water does not leak at the water drainage place.

c. After drainage test is completed, apply insulation materials to the condensing water pipe.

TICA PRO TICA PRO TICA PRO

High static pressure/fresh air handling unit

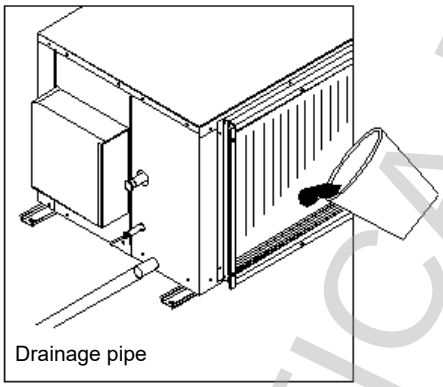

(2) ODU installation

Installation space

Reserve enough space around the unit to facilitate maintenance. For the unit dimensions, the required minimum maintenance space and the dimensions of air leaving space of the unit, see the outline drawing. To ensure that the unit can operate properly, observe the following points:

a. Do not install the unit under a low-rise covering. Air from the condenser shall be discharged smoothly. See the outline drawing.

   Key point: Do not block air discharge from the condenser. Otherwise, hot air inside the heat exchanger will flow back.

b. Do not install the unit at a place where water will drop to the air outlet of the fan.

c. The unit shall be installed at a proper place so that steam discharged upward during unit defrosting will not condense or freeze on the window or covering, or near to the building.

d. Air can be transferred to the condenser from three sides of the unit. Refer to the minimum required space on the outline drawing.

Installation suggestions in the snowing regions

In the regions where snow falls heavily, the unit shall be at least 203 mm to 305 mm higher than the direct installation surface. By doing so, there is less possibility that the heat exchanger is blocked by snow and the water generated during defrosting can be smoothly drained. Avoid installing the unit at a place where snow easily accumulates. Immediately remove the snow around the unit to avoid great decrease in heating capacity. Install a baffle around the unit to prevent snow accumulation. The baffle and the space between units shall comply with the dimensions on the outline drawing.

Installed on the roof

If the unit is installed on the roof, ensure that the building structure can bear weight of the unit and other accessories. For the unit weight, see the weight table.

TICA PRO TICA PRO TICA PRO

⚠**Warning:** Ensure that the building structure of the roof can bear the weight of the unit and other accessories. Otherwise, personal casualties may occur, and the unit and the building may be seriously damaged. The unit shall be installed on a horizontal 102 mm steel frame or 100 x 100 mm wooden installation frame prepared on site. Construct the installation rack and secure it, and then lift the unit to the roof. The installation rack must at least be able to bear three sides of the unit and cross the roof support to distribute weight on the roof.

Installed on the floor horizontally

Horizontal installation shall conform to the space requirements on the drawing. The unit shall be installed on a concrete plate with the thickness of 102 mm. Each direction of the concrete plate shall be 51 mm longer than the unit base. Set a shock-absorbing cushion to reduce shock noise. The unit and concrete plate shall be separated from other buildings nearby to avoid noise or vibration.

⚠**Warning:** To ensure that the ODU is installed securely and reliably and shock is minimized, install the ODU on the hard surface, such as concrete, and set a shock-absorbing cushion to reduce shock.

Do not directly install the ODU on the floor. Do not install the ODU on mud or ice or other places where people are easily injured. During heating or defrosting cycle, condensing water will drop from the outdoor coil. When the outdoor temperature is lower than 0°C, condensing water will be frozen.

The degree of inclination of any vertical surface of the unit cannot exceed 5°.

The ODU cannot be used in the atmospheric environment containing oil sources (including engine oil), salt (marine area), or sulfide gas (the neighborhood of hot spring or oil refinery), because these substances easily cause unit failures. In the scenarios with corrosive gas, choose the special unit that has been protected against corrosion.

⚠**Caution:** The space around the unit for maintenance is subject to the actual unit dimensions. Generally, if the unit dimensions are great, the space is great. For the side-air ODU, recommend reserving more than two meters in the air leaving direction to facilitate effective heat exchange of the outdoor fan.

(3) Connecting IDU and ODU

TICA PRO TICA PRO

Use the purple copper pipe dedicated for cooling that has been dried and cleaned to connect the ODU and IDU. The cooper pipe dimensions and thickness shall comply with the related specifications. The liquid pipes and air pipes shall strictly undergo thermal insulation processing. When the unit is used as a heat pump, temperature of the air pipe may reach 120°C. Therefore, thermal insulation materials shall be resistant to fire and high temperature.

Connecting units through flare

To connect units by using a pipe socket, use a tube cutter to cut the connection pipe to the proper length. It is recommended that the connection pipe should be 20 cm to 30 cm longer than the required copper pipe. Use a reamer or file to remove burr at the end of the copper pipe. When finishing holes, keep the copper pipe face downwards so that no copper borings drop to the copper pipe. Remove the flared nut from the unit and put it on the copper pipe. Use a flaring tool to flare the end of the copper pipe, as shown in the figure on the right.

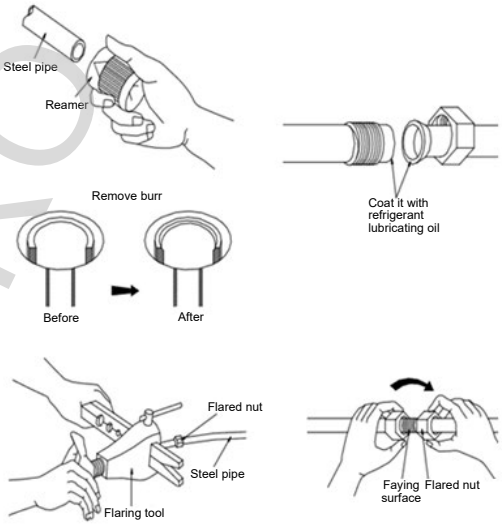

Features of a good flare:

a. The inner surface is smooth and shiny.

b. Edges are smooth.

c. Length of the cone's side is even.

Notes before tightening the connection pipe

a. Use a sealing cap or water-proof tape before using the copper pipe to prevent dust or water from entering the copper pipe.

b. Apply an adequate amount of refrigerant oil to the mating surface between the flare and the faying surface before connecting the copper pipe. This effectively reduces air leakage. Align the connection pipe with the flaring pipe. Slightly rotate the screw of the pipe socket.

c. Use a proper spanner to tighten the screw of the flared nut. (See the following figures.)

Connecting units by welding

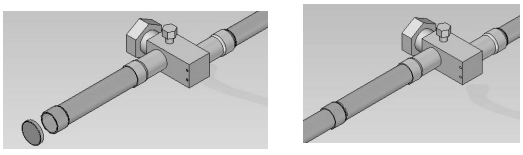

Use a tube cutter to cut the connection pipe to the proper length.

It is recommended that the connection pipe should be 20 cm to 30 cm longer than the required copper pipe.

Use a reamer or file to remove burr at the end of the copper pipe.

When finishing holes, keep the copper pipe face downwards so that no copper borings drop to the copper pipe.

TICA PRO TICA PRO TICA PRO

Remove the plastic covers from the air pipe and liquid pipe. Insert the connection pipe into the expanded opening of the copper pipe and weld it. (See the figure.)

(4) Refrigerant pipeline

When the pipeline is too long or the height difference is too large, both the unit operation reliability and provided energy will be reduced. The resistance of the system pipeline against the refrigerant flow increases along with the number of elbows. This will also reduce the cooling and heating capacities and may lead to a compressor failure. Normally the shortest connection pipeline and the minimum number of elbows are selected during IDU and ODU installation. To prevent generation of copper oxide skin during copper pipe welding, note to add nitrogen as welding connection pipes.

Suggestion: The pipe length is >30 m, the lubricating oil of compressor should be increased. Contact the factory designer or service personnel when the pipe length is ⩾35 meters.

Note: For the connection diagrams of the electric heating models and other requirements, see the connection diagrams accompanied with the units. Due to the continuous improvement and innovation of TICA products, the preceding diagrams are used to guide connection between IDUs and ODUs on site. The electrical principle diagram accompanied with the unit shall prevail.

(5) Duct production and installation

(1) Precautions

- When designing the air duct, please design the air duct with reference to the ESP; the resistance of the air duct should be equal to the ESP, otherwise the air volume will be too large or too small, resulting in the operation failure of the unit;
- Ensure that the spacing from the indoor return air outlet to the air inlet of the heat exchanger is ⩾1m;
- Reasonable air duct design can effectively eliminate noise;
- Can balance the ESP with the duct resistance by adjusting the duct resistance (e.g., by adjusting the air outlet speed of the diffuser);
- In order to reduce the energy loss in the transfer process, and condensate precipitation, the return air duct and the air duct should have an insulation layer;
- The return air duct and the outlet air duct should be fixed on the floor prefabricated plate with iron bracket, and all the interfaces of the air duct should be sealed with sealant;
- Return air duct and outlet air duct edge from the wall ⩾ 150mm.

(2) Duct installation

TICA PRO TICA PRO TICA PRO

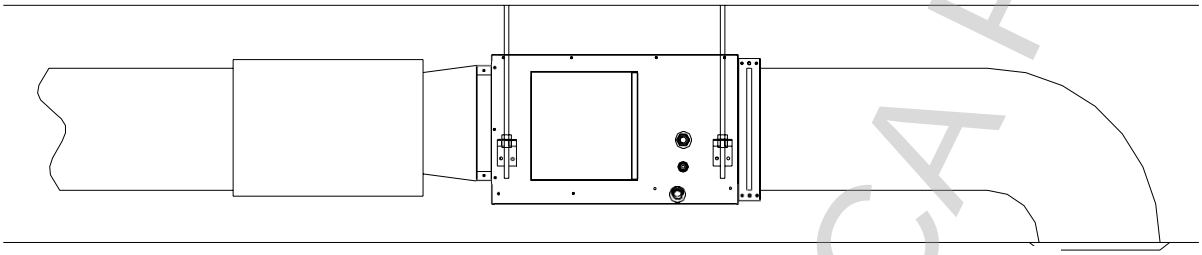

Supply air duct | Static pressure box (optional) | IDU | Return air duct

VI. Instructions of Unit Debugging before Operation

TICA PRO TICA PRO TICA PRO

1. Preparations before Startup

Power voltage

An adverse impact will be caused to the unit when the voltage is too high or too low. If the voltage is unstable, excessive current will be generated at the moment when the unit starts for operation. Consequently, the unit cannot start. The minimum starting voltage of the unit must be kept above 85% of the rated voltage, the voltage must be within ±10% of the rated voltage range during operation, and the voltage difference between the phases should be within the range of ±2%.

The distance (i.e., the voltage drop) between the chiller installation position and the power distribution cabinet and the current size should be considered for the conducting wire diameter. Then, decide the power distribution line path and the main switch capacity to ensure normal operation of the unit.

Check before startup

Be sure to check the entire air conditioning unit system before powering on for trial operation. Pay attention to the following aspects:

1) Checking the air side equipment

- Check whether all the power supply connections of indoor air side equipment are correct and whether the fan operates normally.
- Check whether all the air valves at the indoor air side equipment inlets and outlets are opened.

2) Checking the system pipeline

- Check whether the system pipeline is properly installed.
- Check whether all the valves in the system that should be opened have been opened and all the valves that should be closed have been closed.
- Check whether the thermal insulation and condensate discharge measures of the pipeline system are proper.

3) Checking the power distribution system

- Check whether the power supply is consistent with that required in the instructions and on the unit nameplate.
- Check whether all the power supply and control lines are connected in positions, whether the wires are connected correctly according to the wiring diagram, whether grounding is reliable, and whether all the connection terminals are fastened.

4) Checking the unit

TICA PRO TICA PRO TICA PRO

- Check the unit appearance and the internal piping system for damages caused during transportation, handling, or installation.
- Check whether the fan blades interfere with the fan guard net.

2. Trial Operation

Control parameter settings

For cooling and heating, debug different operating conditions according to the ambient temperature.

Startup steps and judgment

- Power on the unit. Choose cooling or heating mode. Press "ON/OFF" to start the unit.
- After the unit runs for more than 30 minutes and operates stably, check the following items to ensure that the unit can properly operate:

1. Check the power supply.
2. Check the current of the compressor.
3. Measure the high and low pressure of the unit.
4. Measure over-heating degree of the system. Under the nominal cooling conditions (return air dry/wet bulb temperature indoors is 27/19°C and ambient temperature outdoors is 35°C), when the unit operates properly, over-heating degree of each loop should be between 5°C and 8°C.
5. Measure the over-cooling degree of the system. Under the nominal cooling conditions, when the unit operates properly, over-cooling degree of each loop should be between 5°C and 10°C.
6. If refrigerant is determined to be insufficient based on the operating pressure, over-heating degree, and over-cooling degree, locate the leak and repair it. Vacuum the loop, and then charge in the loop with gaseous refrigerant. When the unit is operating, charge in the low pressure pipe with refrigerant until the operating pressure is normal.
7. If refrigerant is determined to be excessive based on the operating pressure, retrieve the refrigerant from the liquid pipe (to minimize the loss of refrigerant oil).
8. Check the unit against the unit commissioning form. If all the items comply with the requirements, it indicates that the unit is up to the standard. In this case, charge in the commissioning form and confirm it with the user.

- Ensure that all the temperature probes, temperature sensors, and temperature controllers are installed at the proper positions. Take thermal insulation measures. Capillary tubes and copper pipes must be securely fixed to avoid shock and abrasion.
- Check the unit and remove wastes, tools, and parts. Fix all the sheet metal parts of the shell, including the control panel and the overhaul cover plate of the compressor. Tighten all the screws in position.

Note: If the high pressure is excessively high and the low pressure is excessively low, but the over-cooling degree is normal, refrigerant may not be insufficient. In this case, recharging refrigerant may result in excessive refrigerant.

TICA PRO TICA PRO

VII. Unit Maintenance

Important tips: If a system fault occurs due to improper maintenance in the

TICA PRO TICA PRO TICA PRO

warranty period, TICA will not bear the maintenance cost. The following content is intended to provide guidance and involves only unit parts, not including other relevant system parts – no matter whether the related system parts are provided by TICA. Since improper operation of the relevant system parts will affect the use and life of the unit, system parts must be maintained in accordance with the suggestions of corresponding manufacturers.

1. Routine Operation and Maintenance

1) Repair and maintenance at the unit evaporation side

- **Air filter**

The air filter functions to prevent outside foreign matters, e.g., dirt, soot, dust, and other sundries that may be brought in by air. If the filter is blocked, its filtering efficiency will be affected, and the unit air flow will be reduced to affect use and normal operation of the unit. Filter cleaning cycle: In the season when the air conditioner is used, the coarse efficiency filter is cleaned every two weeks usually. It is advisable to gently tap the filter screen surface to remove thick blockage, and then clean it in warm water dissolved with cleaning agent. Dry the filter screen thoroughly before reuse.

- **Motor**

The motor has been lubricated and sealed before delivery of the unit, so it does not need to be lubricated during maintenance.

- **Blower**

The tensioning force of the narrow V-belt for the belt-driven blower must be checked after the blower has operated for the first time for 40 hours. The method of controlling the tensioning force of the V-belt (as shown below) is to add a load G vertical to the belt edge to the cutting edge midpoint of the belt (usually hang a spring balance at the midpoint, and then pull it with a hand), making the belt midpoint generate a displacement f. When f = 16 mm, the force indicated on the spring balance should be in the range of 22 N to 34 N. If the force is smaller than 22 N when f = 16 mm, rotate the adjusting screw rod to tension the belt further. If the force is greater than 34 N when f = 16 mm, the tensioning force of the belt is too large. If the tensioning force is insufficient, the load transmission capacity is reduced, the efficiency is low, and the small pulley heats sharply and makes the rubber belt wear. If the tensioning force is too large, the belt service life is reduced, the load on the shaft and bearing is increased, and the bearing heats and wears. When the blower operates normally, note to regularly check the blower for any abnormal sound and observe the operating status of the V-belt. If finding that the narrow V-belt gets loose and affects normal operation of the blower, readjust the V-belt tensioning force according to the above method. If finding that the V-belt has worn and cannot be adjusted and normal operation of the blower is affected, replace the V-belt. The rubber belt must be replaced together with the V-belt.

TICA PRO TICA PRO

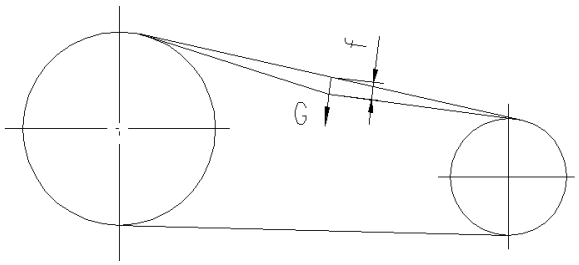

- **Heat exchanger**

A nylon brush can be used to brush the coil fin. A vacuum cleaner must be used for cleaning before brushing. If compressed air is available, use a high pressure air pipe or a spray nozzle to clean the coil.

- **Drainage pipe**

Make sure to check the drainage pipe before the unit operates. If it is blocked, clear the foreign matter so that condensing water can be discharged smoothly.

- **Consumables and wearing parts**

The following accessories are consumables or wearing parts:

(1) Air filter

(2) Belt

(3) Fan bearing

The user needs to replace them according to use conditions in time, lest an equipment fault may occur.

- **Standby components for replacement**

Accessories can be ordered from a seller nearby. To order accessories, you need to provide the following information:

(1) Unit model

(2) Unit factory number

(3) Names and quantities of components

For the detailed information of items (1) and (2), see the nameplate label of the unit.

2) Repair and maintenance at the unit condensation side

- **Preventive maintenance**

The user is responsible for providing the daily, monthly, and annual maintenance requirements of the system.

- **Daily maintenance**

It is recommended to check the following items on a daily basis:

1) Over-heating degree of the compressor —— 6°C-10°C

2) Operating pressure and temperature —— Check the operating pressure and temperature to see whether they are within the limit ranges.

- **Weekly maintenance**

It is recommended to check the following items on a weekly basis:

TICA PRO TICA PRO TICA PRO

1) All the items for daily maintenance
2) Detect leakage for the refrigerant loop.

- **Annual maintenance**

It is recommended to check the following items on an annual basis:

1) All the items for weekly maintenance
2) Operation controller —— Check whether the controller settings are correct and whether it operates in the proper limit range.
3) Check all the connection terminals to see whether any gets loose and whether they operate within the proper limit range.
4) Usually, the unit only needs to be checked quarterly, and the outer surface of condenser should be cleaned. However, if the machine is installed at a place with more oil, smoke and dust, a professional air conditioning technician must clean the heat exchanger frequently to ensure thorough heat exchange and normal operation; otherwise, the machine service life will be reduced.

- **Proper operations**

1) The set temperature should be proper and cannot be too high or too low. The recommended cooling temperature is 26°C to 28°C, and the recommended heating temperature is 18°C to 23°C.
2) Do not keep the doors or windows open for a long time, because this will increase the cooling/heating load of the unit; during cooling, draw the curtain to prevent direct sunlight.
3) Clean the return air filter regularly. The cleaning cycle depends on the environmental conditions.

2. Stop for Maintenance

1) When the unit is operating, do not place flammable materials close to it.
2) If the unit will not operate for a long time, turn off the general power supply; if the unit needs to operate again after being stopped for a long time, connect the power supply for preheating for 12 hours.
3) Do not adjust the temperature control switch frequently; otherwise the air conditioner may be damaged.
4) If the safety device of the compressor acts, restart the unit after the fault is eliminated.
5) If the unit gets faulty, cut off the power supply and then contact the distributor immediately. Do not disassemble the unit without permission; otherwise the fault may expand.

Precautions

1) The air conditioner can be cleaned only after it is shut down and the power supply is turned off; otherwise electric shock or personal injury may be caused.
2) Do not use water to rinse the unit directly or perform overhauling when the unit is operating.

TICA PRO TICA PRO TICA PRO

3) Do not remove the fan guard net; otherwise the fan operating at a high speed will cause danger to you.
4) Do not use a steel wire or copper wire to replace the fuse. Use a fuse of the correct specification; otherwise the unit will be damaged.
5) Do not damage the heat exchanger fin.
6) Do not use the cooling mode when the outdoor temperature is lower than 0°C; otherwise the compressor unit will be damaged.

⚠ Warning

Upon finding any abnormality (e.g., burning smell), turn off the power supply and seek instructions from the distributor. If you continue to use the air conditioner in this situation, the air conditioner will be damaged and may lead to an electric shock or fire accident. Only professional maintainers can perform maintenance work. Before connecting devices, make sure to cut off all the power supplies.

VIII. Analysis and Handling Methods of Common Unit Faults

Common Fault Codes

TICA PRO TICA PRO TICA PRO

For details, see the sections that describe controller instructions.

Fault Analysis and Handling Methods

The unit may get faulty to different degrees during use. The table below provides some common faults and their handling methods. If the unit gets faulty, the user needs to contact an authorized distributor or branch company of TICA and cannot try to repair it independently.

Analysis of common electric control faults:

Common Fault	Cause	Solution
Communication faults	1. External high voltage enters the control board.	1. Make sure that the power supply is normal on the field.
	2. There is external electromagnetic interference.	2. Keep the installed unit far away from interference sources.
	3. The communication line is disconnected abnormally.	3. Check and replace the communication line.
	4. Wiring is wrong.	4. Correct the wiring.
	5. The wired controller or main board has a hardware or software problem.	5. Replace the wired controller or main board.
	6. Twisted pair or shielded cable is not used.	6. Use twisted pair or shielded cable.
	7. The high voltage line and communication line are not wired separately.	7. Wire the high voltage line and communication line separately.
No display on the wired controller	1. Normal protection leads to power loss of the module.	1. Judge whether it is caused by protection by referring to the circuit diagram.
	2. Wiring is wrong.	2. Correct the wiring.
	3. The wired controller is damaged.	3. Replace the wired controller.
	4. There is a communication fault.	4. Eliminate the fault by referring to the cause of communication fault.
	5. The control main board has a power failure.	5. Check the cause of power failure, restore the power supply, and replace the main board.
	6. The control main board is damaged.	6. Check and replace the main board.
The unit does not operate after being powered on	1. The unit stops normally because the set temperature is not proper.	1. Change the set temperature.
	2. The remote switch (if any) is not closed.	2. Close the remote switch (if any).
	3. The unit stops due to a fault.	3. Eliminate the fault according to the fault code.
	4. The main board or wired controller is damaged.	4. Replace the main board or wired controller.
	5. Timed power-on is set, but the time has not come.	5. Wait or cancel the timer setting.
Fault code displayed		Search the corresponding cause by referring to the fault code.

⚠Caution: The following circumstances are normal phenomena.

- When the temperature reaches the value set by the user during operation of the unit, the unit will stop operation automatically. After the temperature rises, the unit will restart operation automatically according to the operating mode set by the user.
- When the outdoor temperature is low and the humidity is relatively large, the outdoor heat

TICA PRO TICA PRO TICA PRO

exchanger may frost during operation of the unit. To ensure normal operation of the unit, the microcomputer controller of the unit will make judgment according to the time and temperature and enter the defrosting process automatically. After defrosting ends, the unit will restart operation automatically according to the operating mode set by the user.

IX. After-sales Service

If repair and maintenance service is needed, call the 400 service hotline.

⚠ Caution:

Improper maintenance or repair may cause water leakage, electric shock or fire.

TICA PRO TICA PRO TICA PRO

When the unit must be moved or reinstalled, consult the factory of TICA.

Warranty

The warranty period and detailed content of warranty are subject to the ordering contract.

TICA PRO TICA PRO TICA PRO

X. Names and Content of Hazardous Substances in Products

- This product complies with the environmental protection requirements of the Measures for the Administration of the Restricted Use of the Hazardous Substances Contained in Electrical and Electronic Products.
- Environmental protection service life: In the environmental protection service life, the user's normal use of this product will not cause serious pollution to the environment or cause serious damages to persons and properties. The service life is specified by TICA. The environmental protection service life is not equivalent to the service life of safe use.
- Recycling: When this product is not needed or its service life ends, recycle it according to the related national regulations on recycling of waste electrical and electronic products. Do not discard it at will.
- Names and content of hazardous substances in products

Part name	Hazardous substance					
	Plumbum (Pb)	Mercury (Hg)	Cadmium (Cd)	Hexavalent chromium (Cr(VI))	Polybrominated Biphenyl (PBB)	Polybrominated Diphenyl Ether (PBDE)
Motor	O	O	O	O	O	O
Heat exchanger	O	O	O	O	O	O
Refrigerant	O	O	O	O	O	O
Pipeline fittings and valves	×	O	O	O	O	O
Screws, bolts, and other fasteners	O	O	O	×	O	O
Other metal parts	O	O	O	×	O	O
Controller and electrical components	×	O	O	O	O	O
Sponge	O	O	O	O	O	O
Foam	O	O	O	O	×	O
Other plastic parts	O	O	O	O	O	×
Rubber parts	O	O	O	O	O	O
Other printed matters	O	O	O	O	O	O
Accessories(remote controller, battery, etc.)*	O	O	O	O	O	O

This table is prepared according to the provisions of SJ/T 11364.
O: It indicates that the content of this hazardous substance in all homogeneous materials in this part is below the limit requirement defined in GB/T 26572.
×: It indicates that the content of this hazardous substance in at least one homogeneous material in this part exceeds the limit requirement defined in GB/T 26572. Moreover, substitution cannot be implemented at present due to technical reasons, and it will be improved gradually along with

TICA PRO TICA PRO

technical progress in the future.
*: It indicates that the environmental protection service life of the battery matched with the product is 2 years.



The number in this identification indicates that the environmental protection service life of the product under the normal use status is 15 years. Some parts may also have the identification of environmental protection service life, and their environmental protection service life is subject to the number in the identification. The product configuration may be different due to different models or product improvements. The actual configuration of sold products should prevail.

TICA PRO TICA PRO TICA PRO

«TICA PRO» LLC

Tel. +7(495)822-29-00
E-mail: info@tica.ru
www.tica.ru/en/

The copyright of this manual belongs to Nanjing TICA Climate Solutions. Anyone without consent or authorization shall not copy, reproduce or extract this manual without permission. TICA reserves the right to sue.

TICA PRO TICA PRO TICA PRO